System overview

Power regulation and declarations

Sheet 02

{B_POWER_REGULATION} {B_POWER_REGULATION}

CPU / Pi power selection and switches

Sheet 03

{B_POWER_SELECTION} {B_POWER_SELECTION}

Address, data and SMI latches

Sheet 04

{B_LATCHES} {B_LATCHES}

Latch decoupling and SMI net ties

Sheet 05

{B_LATCH_SUPPORT} {B_LATCH_SUPPORT}

Level translation and control inversion

Sheet 06

{B_TRANSLATION} {B_TRANSLATION}

68000 socket and motherboard interface

Sheet 07

{B_CPU_INTERFACES} {B_CPU_INTERFACES}

CPLD and support

Sheet 08

{B_PROGRAMMABLE} {B_PROGRAMMABLE}

Raspberry Pi interface and power indicators

Sheet 09

{B_PI_INTERFACE} {B_PI_INTERFACE}

Population options and status indicators

Sheet 10

{B_ASSEMBLY_OPTIONS} {B_ASSEMBLY_OPTIONS}

Board guide and engineering reference

Sheet 11

Hierarchical buses name the cross-sheet signals. Global labels continue each exact native net.

Open documentation/index.html for the board guide, connector maps and validation records.

BUS {B_ROOT}

B_POWER_REGULATION, B_POWER_SELECTION, B_LATCHES, B_LATCH_SUPPORT,
B_TRANSLATION, B_CPU_INTERFACES, B_PROGRAMMABLE, B_PI_INTERFACE,
B_ASSEMBLY_OPTIONS

Precision-Arrays / Minimig.ca

Sheet: /
File: AmiCube-PiStorm68K.kicad_sch

Title: AmiCube PiStorm68K / sheet 1

Size: A4 | Date: 2026-10-16 | Rev: 1.8

KiCad E.D.A. 10.0.7 | Id: 1/16

Power regulation and declarations

5 V buck–boost regulation

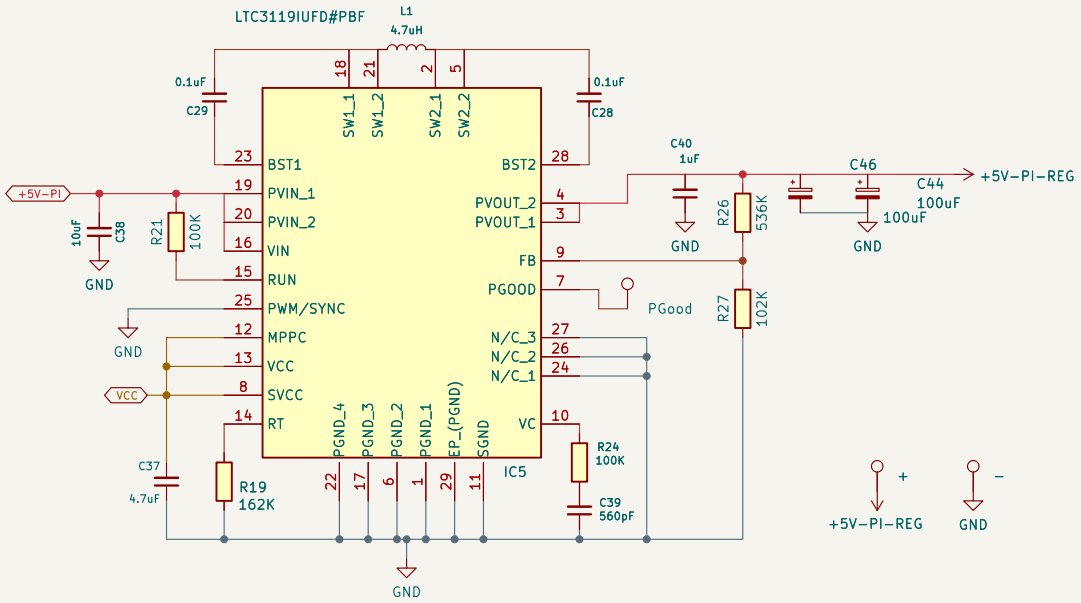

Logic regulation and net ties

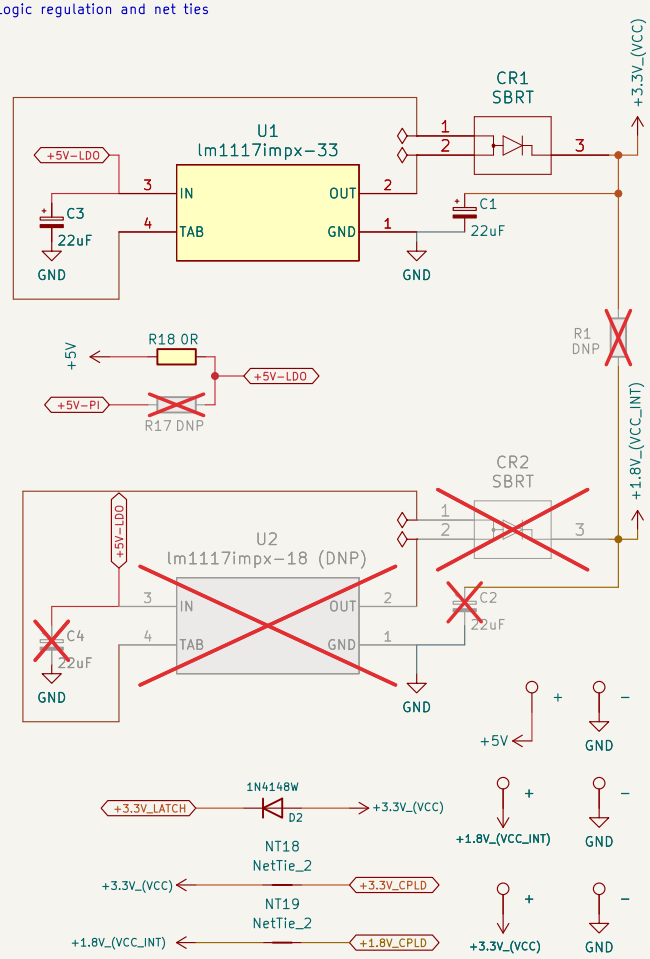

Power flags

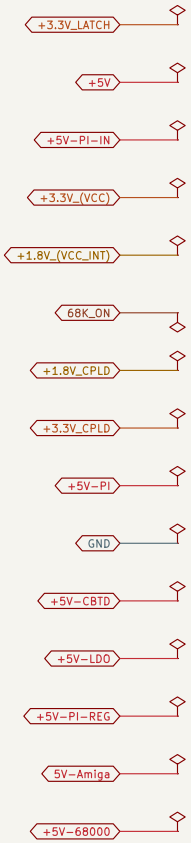

{B_POWER_REGULATION}

BUS {B_POWER_REGULATION}

5V–Amiga, 68K_ON, +1.8V_(VCC_INT), +1.8V_CPLD, +3.3V_(VCC), +3.3V_CPLD, +3.3V_LATCH, +5V, +5V–68000, +5V–CBTD, +5V–PI, +5V–PI–IN, +5V–PI–REG, GND

Precision–Arrays / Minimig.ca

Sheet: /Power regulation and declarations/
File: power_regulation.kicad_sch

Title: AmiCube PiStorm68K / sheet 2

Size: A4 | Date: 2026–10–16 | Rev: 1.8

KiCad E.D.A. 10.0.7 | Id: 2/16

CPU / Pi power selection and switches

68000 / PiStorm power selection

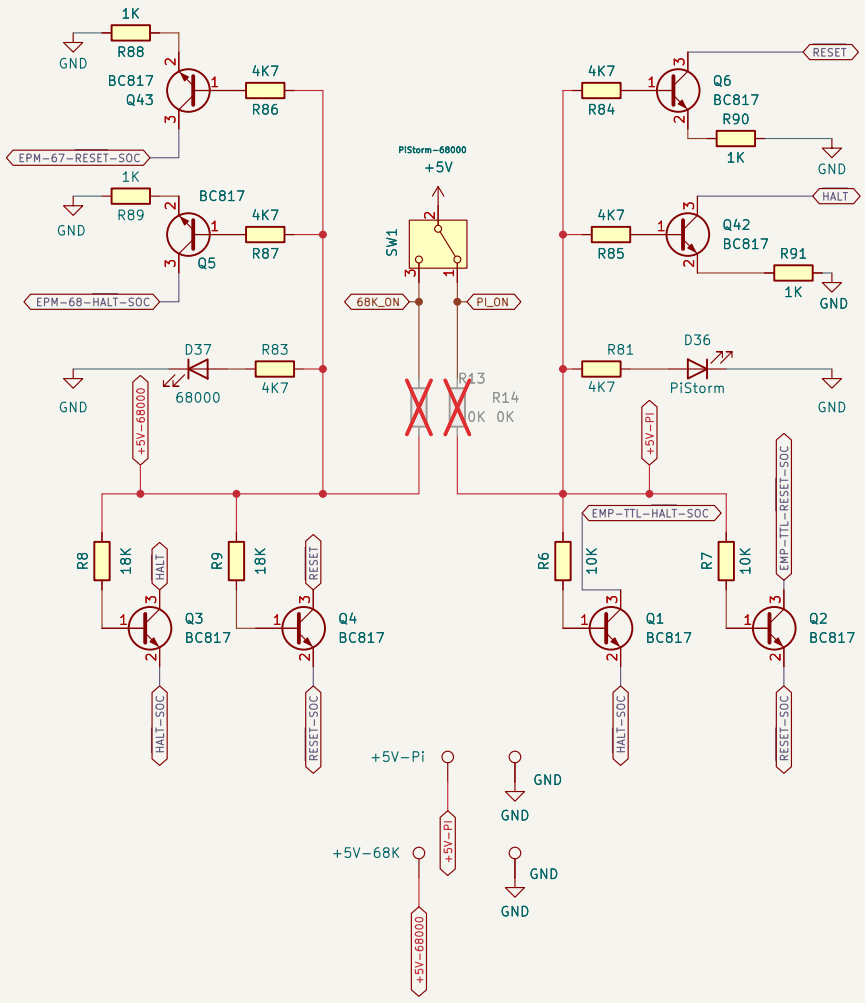

CPU and Raspberry Pi load switches

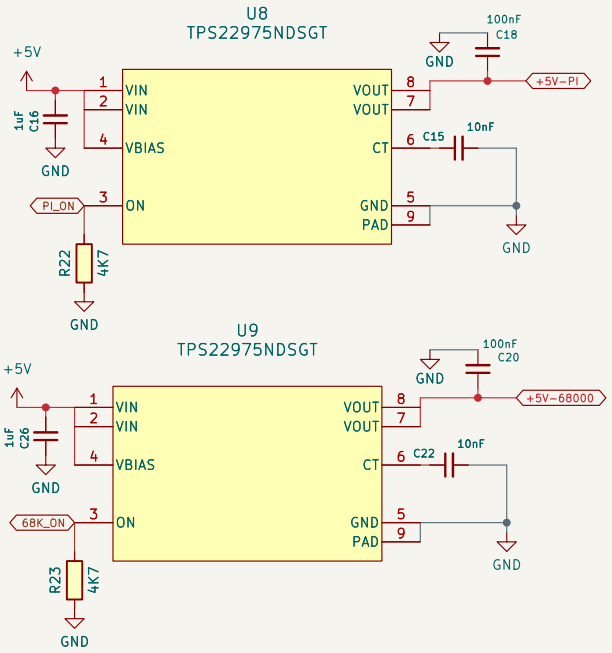

{B_POWER_SELECTION}

BUS {B_POWER_SELECTION}

68K_ON, +5V, +5V-68000, +5V-PI, EMP-TTL-HALT-SOC, EMP-TTL-RESET-SOC, EPM-67-RESET-SOC, EPM-68-HALT-SOC, GND, HALT, HALT-SOC, RESET, RESET-SOC

Precision-Arrays / Minimig.ca	
Sheet: /CPU / Pi power selection and switches/ File: power_selection.kicad_sch	
Title: AmiCube PiStorm68K / sheet 3	
Size: A4	Date: 2026-10-16
KiCad E.D.A. 10.0.7	Id: 3/16

Rev: 1.8

Address, data and SMI latches

Address, data and SMI latches

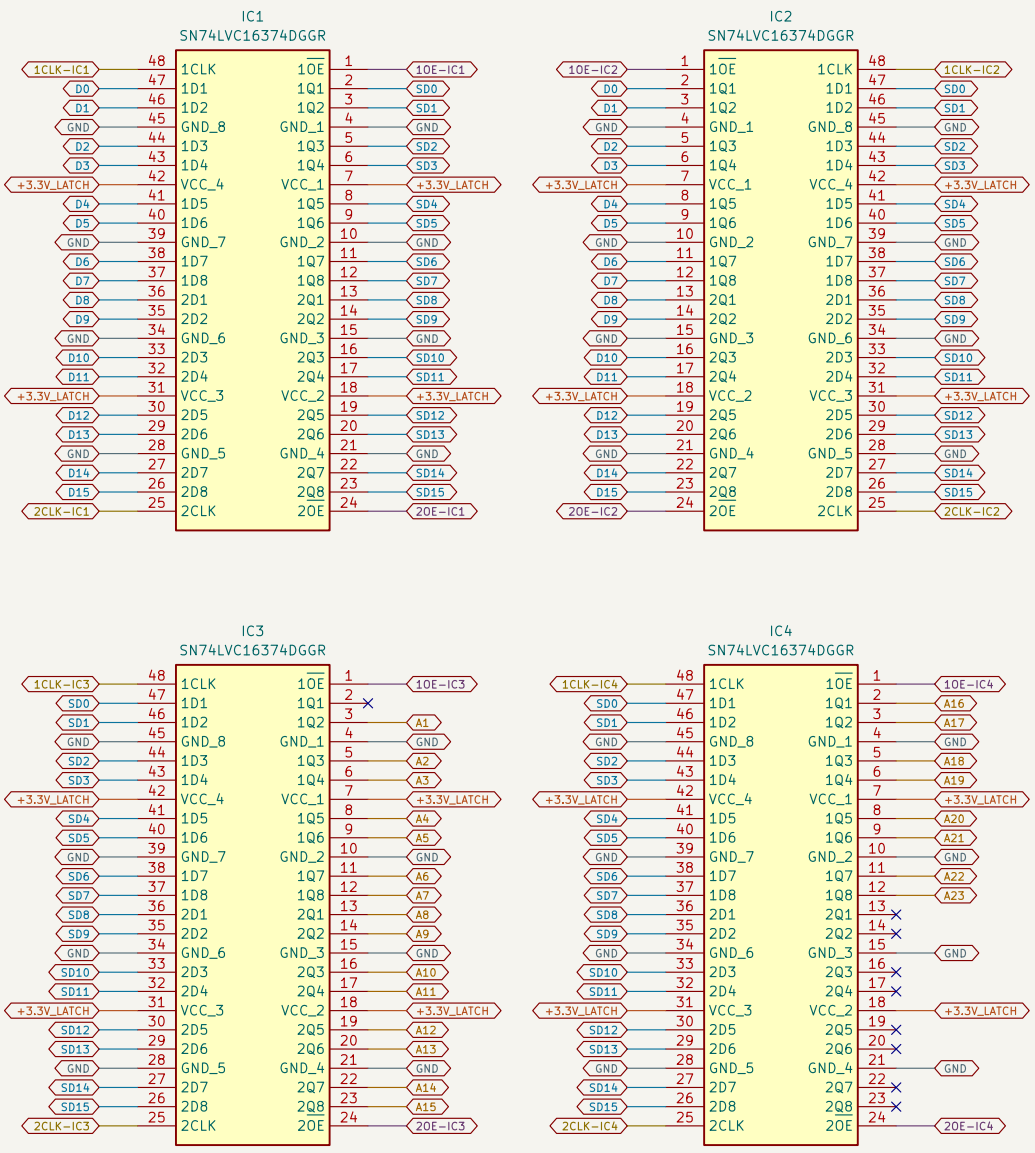

{B_LATCHES}

BUS {B_LATCHES}

1CLK-IC[1..4], 1OE-IC[1..4], 2CLK-IC[1..4],
2OE-IC[1..4], +3.3V_LATCH, A[1..23],
D[0..15], GND, SD[0..15]

Precision-Arrays / Minimig.ca

Sheet: /Address, data and SMI latches/
File: latches.kicad_sch

Title: AmiCube PIStorm68K / sheet 4

Size: A4 | Date: 2026-10-16 | Rev: 1.8
KiCad E.D.A. 10.0.7 | Id: 4/16

Latch decoupling and SMI net ties

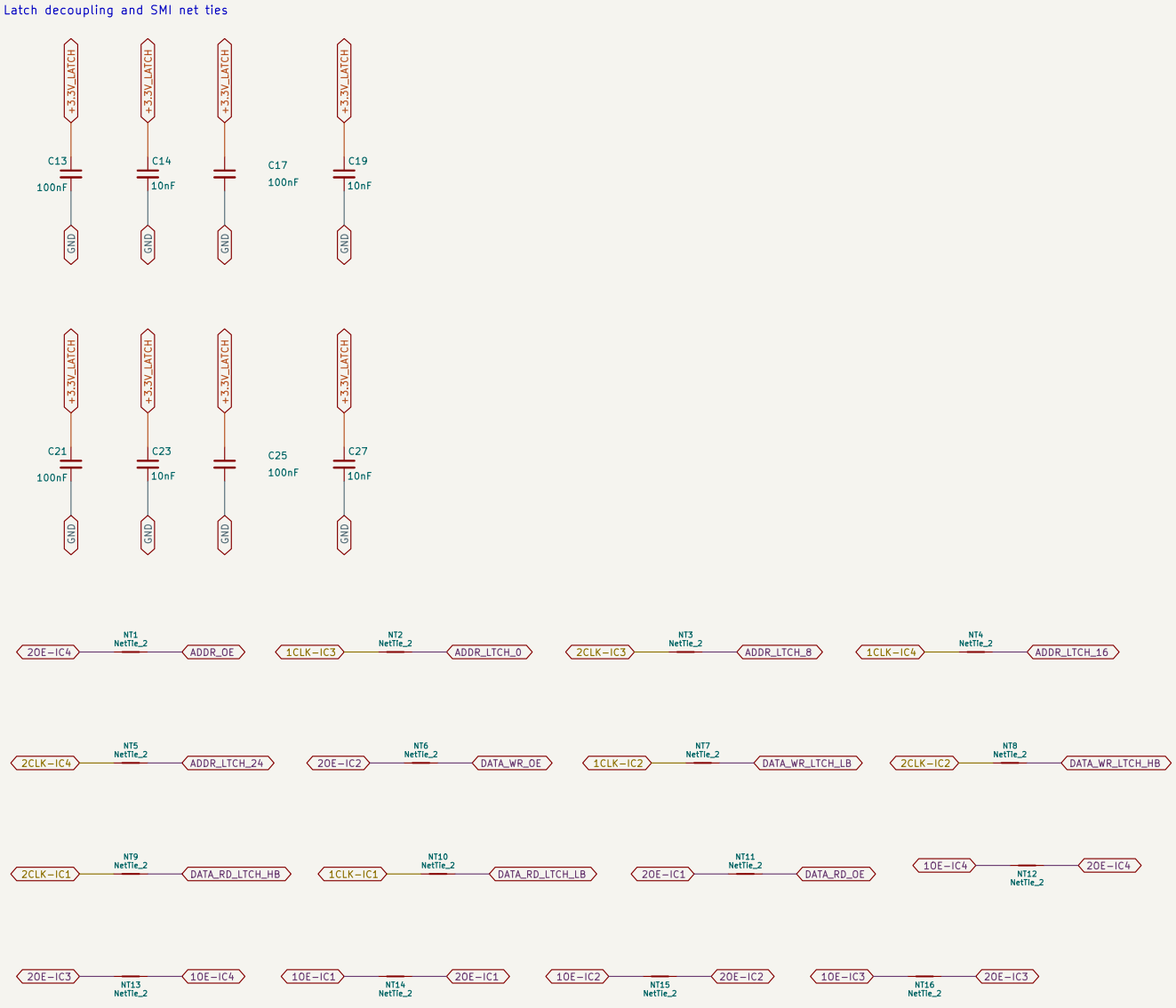

{B_LATCH_SUPPORT}

BUS {B_LATCH_SUPPORT}

1CLK-IC[1..4], 1OE-IC[1..4], 2CLK-IC[1..4],
2OE-IC[1..4], +3.3V_LATCH, ADDR_LTCH_0,
ADDR_LTCH_8, ADDR_LTCH_16, ADDR_LTCH_24,
Complete members: open the bus alias or documentation/index.html.

Precision-Arrays / Minimig.ca

Sheet: /Latch decoupling and SMI net ties/
File: latch_support.kicad_sch

Title: AmiCube PiStorm68K / sheet 5

Size: A4 | Date: 2026-10-16 | Rev: 1.8

KiCad E.D.A. 10.0.7 | Id: 5/16

Level translation and control inversion

CPLD / 68000 level translation A

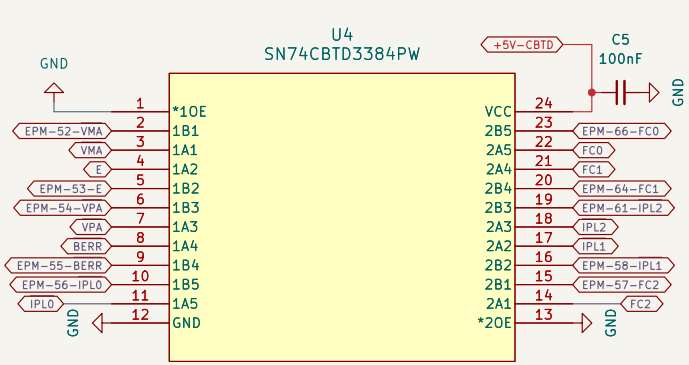

CPLD / 68000 level translation B

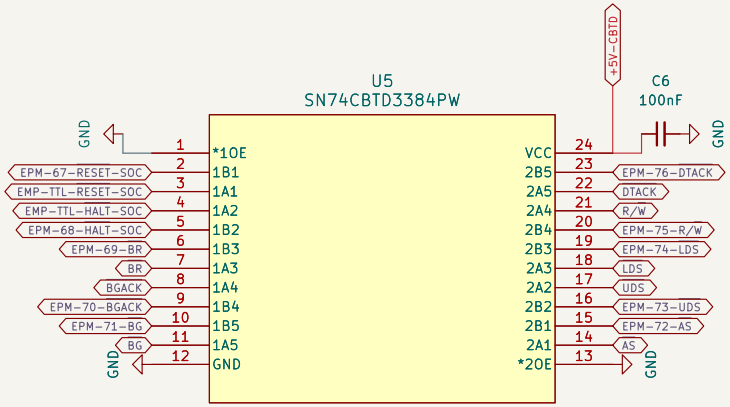

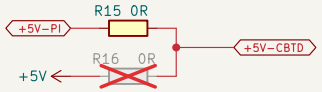

Control-signal inversion

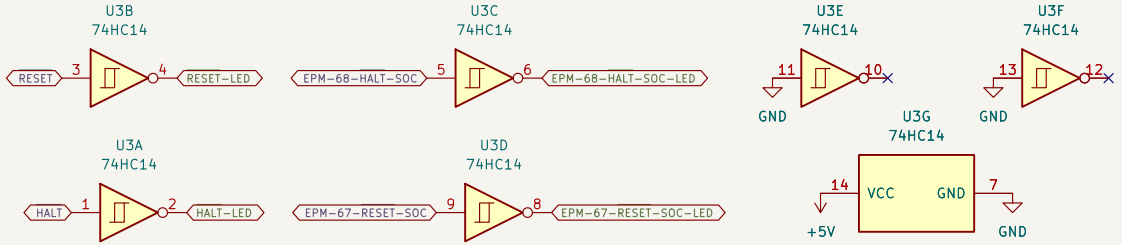

{B_TRANSLATION}

BUS {B_TRANSLATION}

+5V, +5V-CBTD, +5V-PI, E, EMP-TTL-HALT-SOC, EMP-TTL-RESET-SOC, EPM-52-VMA, EPM-53-E, EPM-54-VPA, EPM-55-BERR, EPM-56-IPL0, EPM-57-FC2, EPM-58-IPL1, EPM-61-IPL2, EPM-64-FC1, EPM-66-FC0,
Complete members: open the bus alias or documentation/index.html.

Precision-Arrays / Minimig.ca

Sheet: /Level translation and control inversion/
File: translation.kicad_sch

Title: AmiCube PiStorm68K / sheet 6

Size: A4 | Date: 2026-10-16 | Rev: 1.8
KiCad E.D.A. 10.0.7 | Id: 6/16

68000 socket and motherboard interface

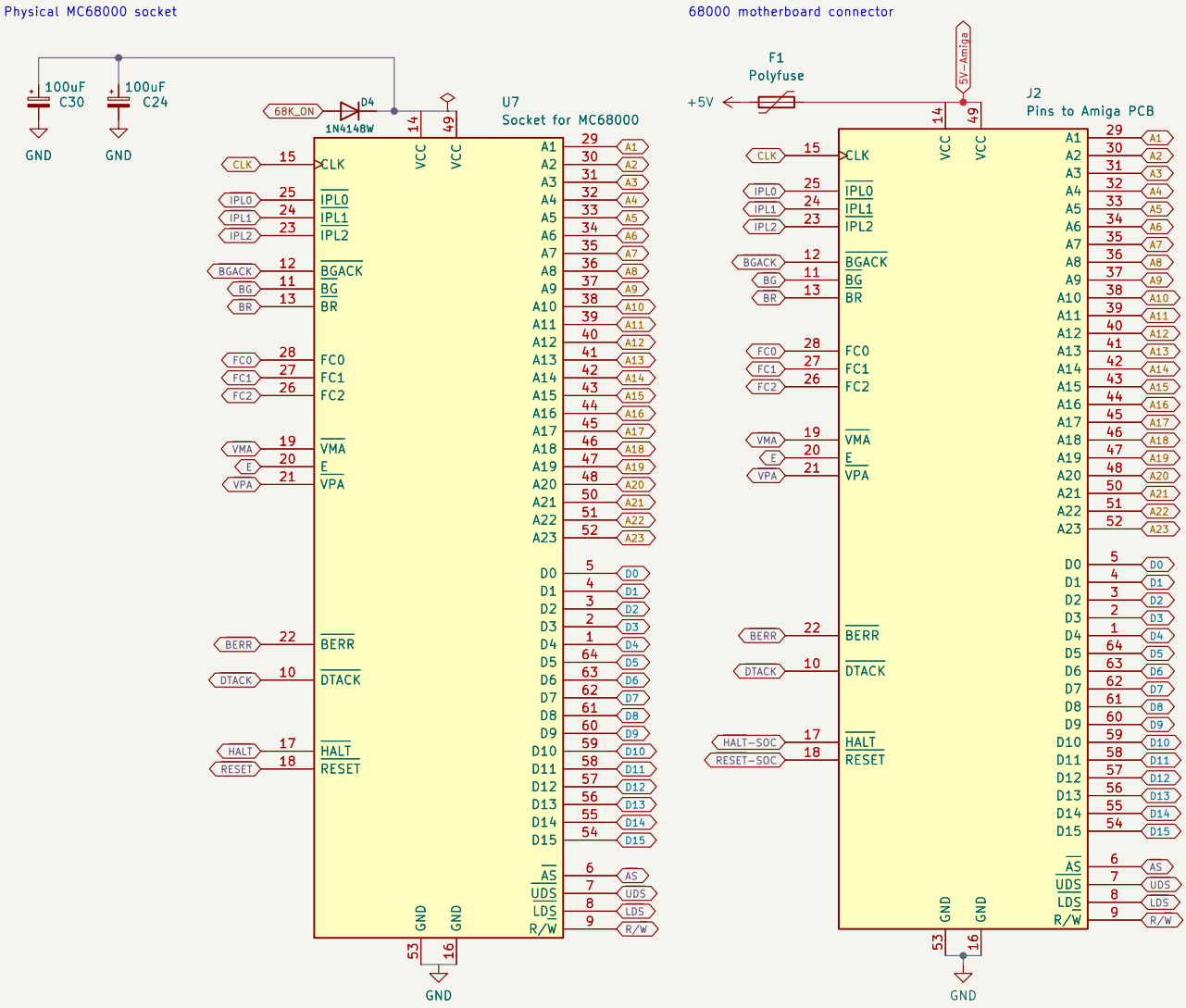

{B_CPU_INTERFACES}

BUS {B_CPU_INTERFACES}

5V-Amiga, 68K_ON, +5V, A[1..23], CLK, D[0..15], E, FC[0..2], GND, R/W, AS, BERR, BGACK, BG, BR, DTACK,

Complete members: open the bus alias or documentation/index.html.

Precision-Arrays / Minimig.ca

Sheet: /68000 socket and motherboard interface/

File: cpu_interfaces.kicad_sch

Title: AmiCube PiStorm68K / sheet 7

Size: A4 | Date: 2026-10-16 | Rev: 1.8

KiCad E.D.A. 10.0.7 | Id: 7/16

CPLD and support

PiStorm CPLD and support

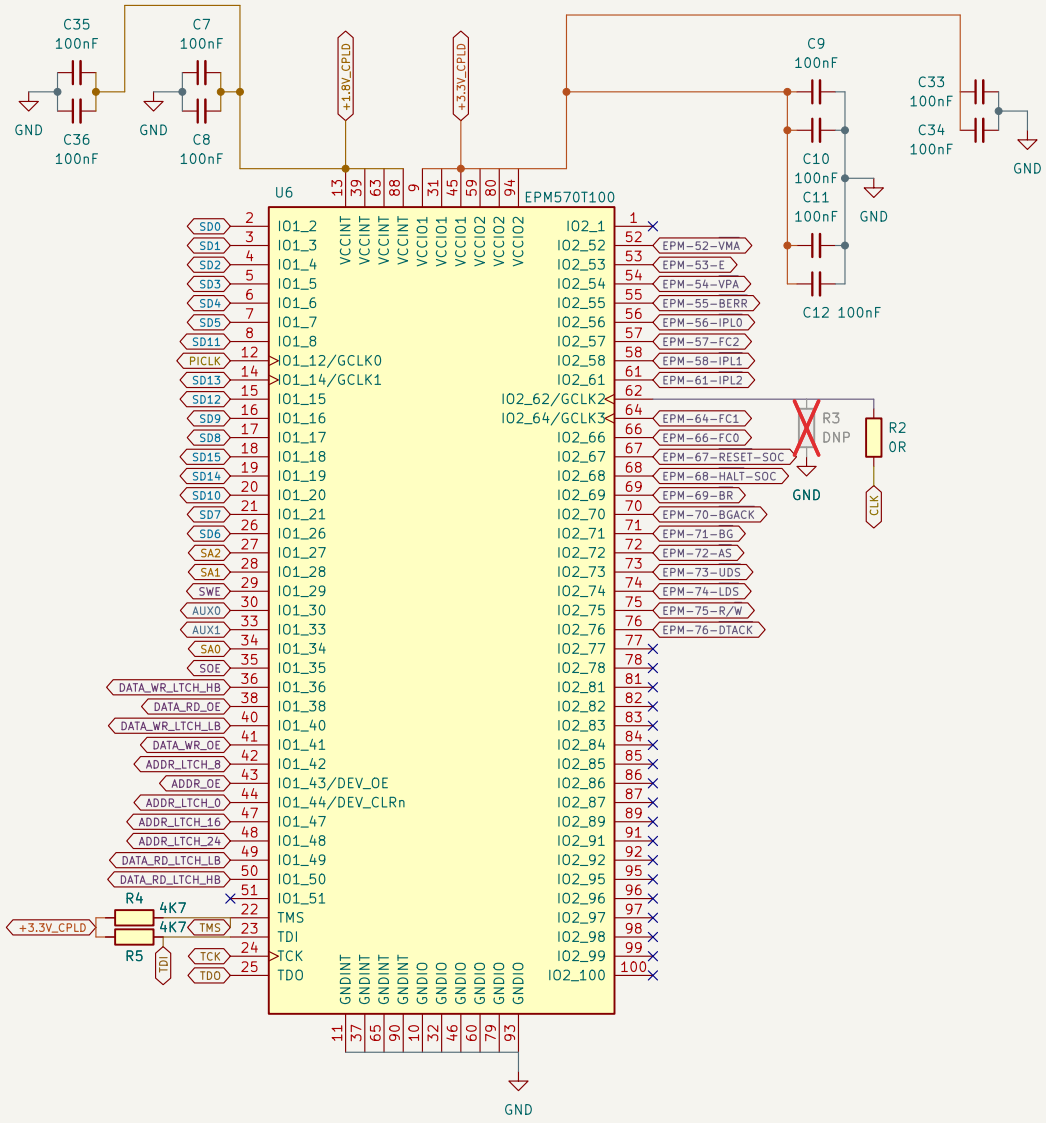

{B_PROGRAMMABLE}

BUS {B_PROGRAMMABLE}

+1.8V_CPLD, +3.3V_CPLD, ADDR_LTCH_0,
ADDR_LTCH_8, ADDR_LTCH_16, ADDR_LTCH_24,
ADDR_OE, AUX0, AUX1, CLK, DATA_RD_LTCH_HB,
Complete members: open the bus alias or documentation/index.html.

Precision—Arrays / Minimig.ca

Sheet: /CPLD and support/
File: programmable.kicad_sch

Title: AmiCube PiStorm68K / sheet 8

Size: A4	Date: 2026-10-16	Rev: 1.8
KiCad E.D.A. 10.0.7		Id: 8/16

Raspberry Pi interface and power indicators

Raspberry Pi interface

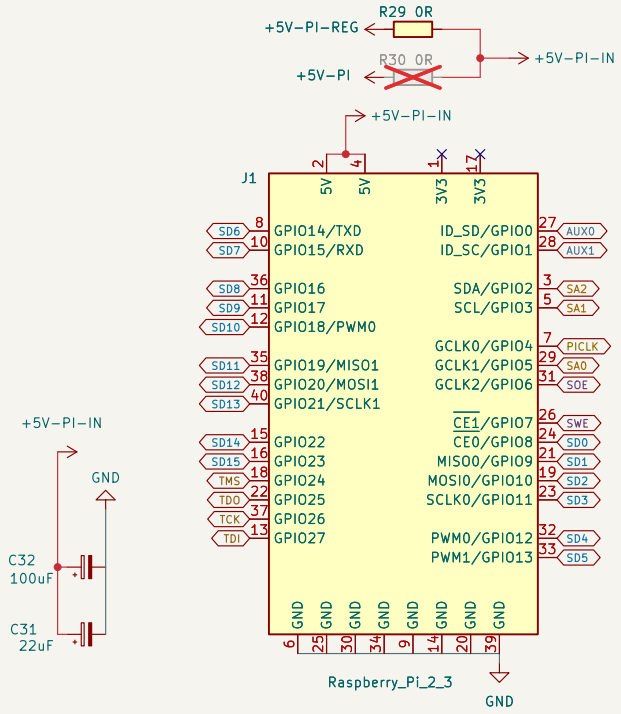

Power rail indicators

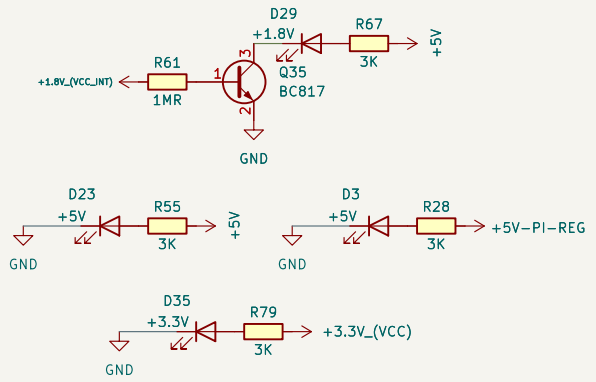

{B_PI_INTERFACE}

BUS {B_PI_INTERFACE}

+1.8V_(VCC_INT), +3.3V_(VCC), +5V, +5V-PI, +5V-PI-IN, +5V-PI-REG, AUX0, AUX1, GND, PICLK, SA[0..2], SD[0..15], SOE, SWE, TCK, TDI, TDO, TMS

Precision-Arrays / Minimig.ca	
Sheet: /Raspberry Pi interface and power indicators/ File: pi_interface.kicad_sch	
Title: AmiCube PiStorm68K / sheet 9	
Size: A4	Date: 2026-10-16
KiCad E.D.A. 10.0.7	Id: 9/16

Rev: 1.8

Population options and status indicators

Possible Part Combinations

CPLD(U6)	VCC_INT	Latches (IC1, IC2, IC3, IC4)
EPM570T100	R1=0R VCC_INT DNP	74LVC16373 74LVC16374
EPM240T100	R1=0R VCC_INT DNP	74LVC16373 74LVC16374
5M240ZT100	R1=DNP VCC_INT assembled	74LVC16373 74LVC16374
5M570ZT100	R1=DNP VCC_INT assembled	74LVC16373 74LVC16374

Mounting, fiducials and artwork

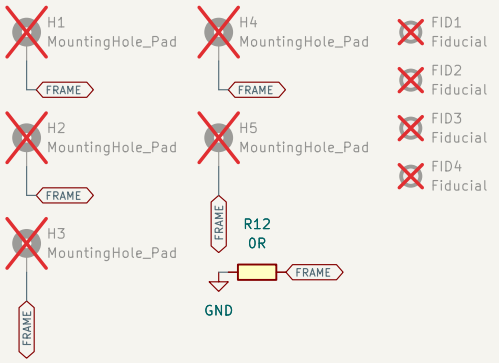

68000 control indicators

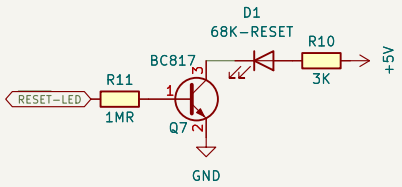

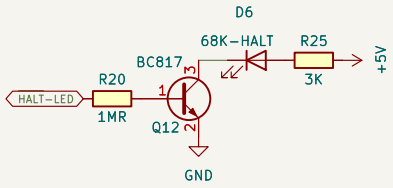

PiStorm control indicators

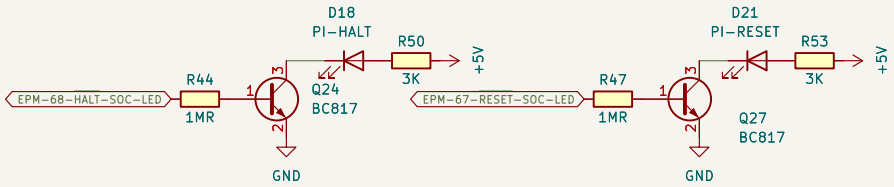

{B_ASSEMBLY_OPTIONS}

BUS {B_ASSEMBLY_OPTIONS}

+5V, EPM-67-$\overline{\text{RESET}}$-SOC-LED, EPM-68-$\overline{\text{HALT}}$-SOC-LED, GND, $\overline{\text{HALT}}$-LED, $\overline{\text{RESET}}$-LED

Precision-Arrays / Minimig.ca

Sheet: /Population options and status indicators/
File: assembly_options.kicad_sch

Title: AmiCube PiStorm68K / sheet 10

Size: A4 | Date: 2026-10-16 | Rev: 1.8

KiCad E.D.A. 10.0.7 | Id: 10/16

Board guide and engineering reference

Top assembly

Sheet 12

Bottom assembly

Sheet 13

Layer stackup and fabrication

Sheet 14

Routing guide

Sheet 15

Power and signal identification

Sheet 16

Hierarchical buses name the cross-sheet signals. Global labels continue each exact native net.

Open documentation/index.html for the board guide, connector maps and validation records.

Precision-Arrays / Minimig.ca

Sheet: /Board guide and engineering reference/
File: Documentation.kicad_sch

Title: AmiCube PiStorm68K / sheet 11

Size: A4 | Date: 2026-10-16 | Rev: 1.8

KiCad E.D.A. 10.0.7 | Id: 11/16

Top assembly

Component placement, fitted-side orientation and 3D reference

ASSEMBLY NOTES

01 View from outside the top of the board. Use connector edges to orient the board.

02 Teal identifies pad 1 / A1. Red crosses mark DNP footprints. Confirm polarity from the footprint and datasheet.

03 The component table controls values and population. The 3D view is illustrative; use the scale below for the plan.

REFERENCE PLAN

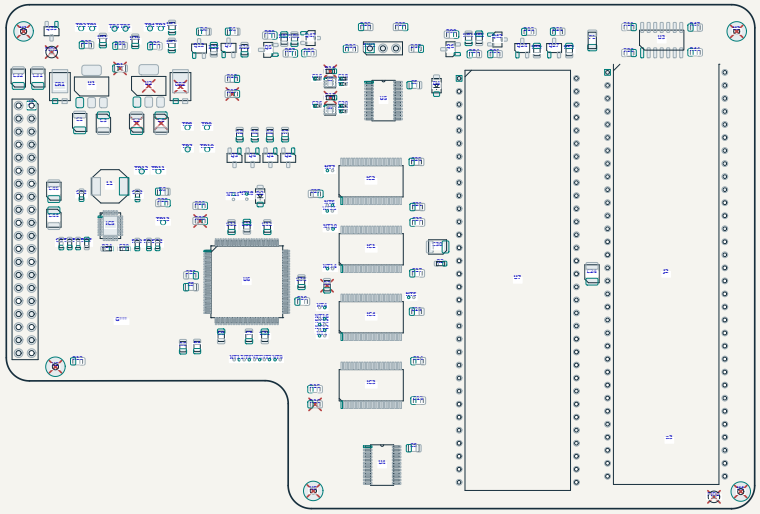

25 mm scale check / plan 0.68:1

3D ASSEMBLY VIEW

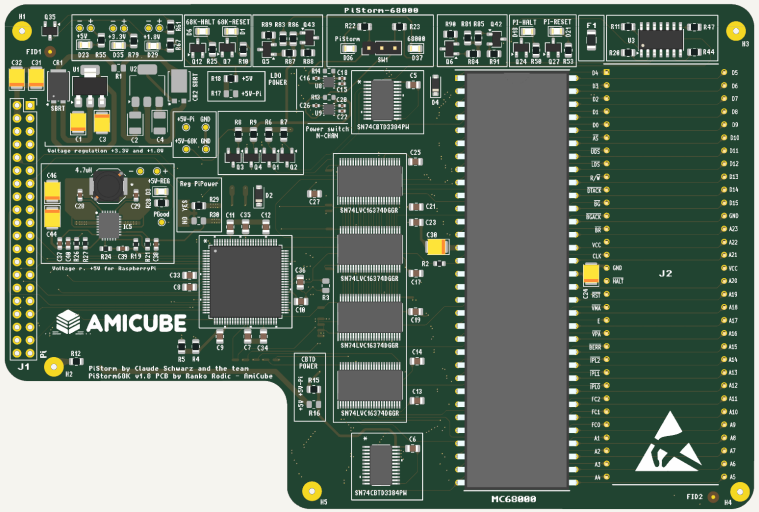

145.93 × 98.25 mm outline

ASSEMBLY INVENTORY

Placement	Footprints	SMD	DNP
Top side	176	134	18
Bottom side	4	2	2

Saved pads and fabrication outlines form the reference plan. Component values, connector pin maps and source notes are in documentation/index.html.

Ranko Rodic / Minimig.ca | Precision-Arrays

1.8 • generated 2026-10-16 • source 82030dcfa626

Units: mm. Source CAD governs. Regenerate after design changes.

Documentation only; no electrical symbols

Minimig.ca / Minimig

Sheet: /Board guide and engineering reference/Top assembly/
File: AssemblyTop.kicad_sch

Title: AmiCube PiStorm68K / Top assembly

Size: A4	Date: 2026-10-16	**Rev: 1.8**
KiCad E.D.A. 10.0.7		Id: 12/16

Bottom assembly

Component placement, fitted-side orientation and 3D reference

ASSEMBLY NOTES

01 View from outside the bottom of the board. Bottom plan is mirrored.

02 Teal identifies pad 1 / A1. Red crosses mark DNP footprints. Confirm polarity from the footprint and datasheet.

03 The component table controls values and population. The 3D view is illustrative; use the scale below for the plan.

REFERENCE PLAN

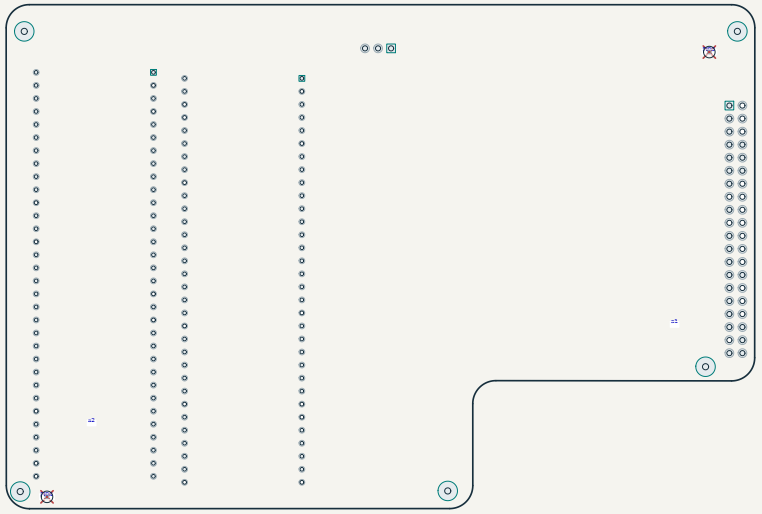

25 mm scale check / plan 0.68:1

3D ASSEMBLY VIEW

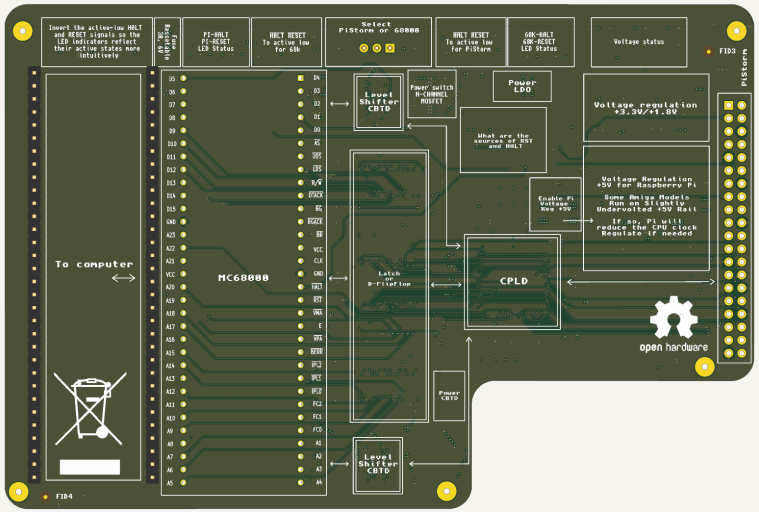

145.93 × 98.25 mm outline

ASSEMBLY INVENTORY

Placement	Footprints	SMD	DNP
Top side	176	134	18
Bottom side	4	2	2

Saved pads and fabrication outlines form the reference plan. Component values, connector pin maps and source notes are in documentation/index.html.

Ranko Rodic / Minimig.ca | Precision-Arrays

1.8 • generated 2026-10-16 • source 82030dcfa626

Units: mm. Source CAD governs. Regenerate after design changes.

Documentation only; no electrical symbols

Minimig.ca / Minimig

Sheet: /Board guide and engineering reference/Bottom assembly/
File: AssemblyBottom.kicad_sch

Title: AmiCube PiStorm68K / Bottom assembly

Size: A4	Date: 2026-10-16	**Rev: 1.8**
KiCad E.D.A. 10.0.7		Id: 13/16

Layer stackup and fabrication

Source project settings. Dimensions and fabrication parameters come from the saved PCB.

Layer	Type	Material	mm
F.SilkS	Top Silk Screen	—	—
F.Paste	Top Solder Paste	—	—
F.Mask	Top Solder Mask	—	0.01
F.Cu	copper	—	0.035
dielectric 1	prepreg	FR4	0.1
In1.Cu	copper	—	0.035
dielectric 2	core	FR4	0.535
In2.Cu	copper	—	0.035
dielectric 3	prepreg	FR4	0.1
In3.Cu	copper	—	0.035
dielectric 4	core	FR4	0.535
In4.Cu	copper	—	0.035
dielectric 5	prepreg	FR4	0.1
B.Cu	copper	—	0.035
B.Mask	Bottom Solder Mask	—	0.01
B.Paste	Bottom Solder Paste	—	—
B.SilkS	Bottom Silk Screen	—	—

Saved board parameters

Property	Saved value
Outline	145.93 × 98.25 mm
Board thickness	1.6 mm
Copper layers	6
Footprints	180
Track/arc items	3875
Vias	782

Saved routing rules / mm

Class	Clearance	Track	Via/drill
Default	0.15	0.1	0.3/0.15
Data	0.15	0.12	0.3/0.15
Power	0.15	0.3	0.3/0.15

These drawings record the source design. Confirm material, layer stack and fabrication capabilities against the native project before manufacture.

Ranko Rodic / Minimig.ca | Precision-Arrays

1.8 • generated 2026-10-16 • source 82030dcfa626

Units: mm. Source CAD governs. Regenerate after design changes.

Documentation only; no electrical symbols
Minimig.ca / Minimig
Sheet: /Board guide and engineering reference/Layer stackup and fabrication/
File: Stackup.kicad_sch
Title: AmiCube PiStorm68K / Layer stackup and fabrication
Size: A4 | Date: 2026-10-16 | Rev: 1.8
KiCad E.D.A. 10.0.7 | Id: 14/16

Routing guide

Outer copper from saved tracks, pads and vias. Filled zones are omitted for clarity.

Front copper

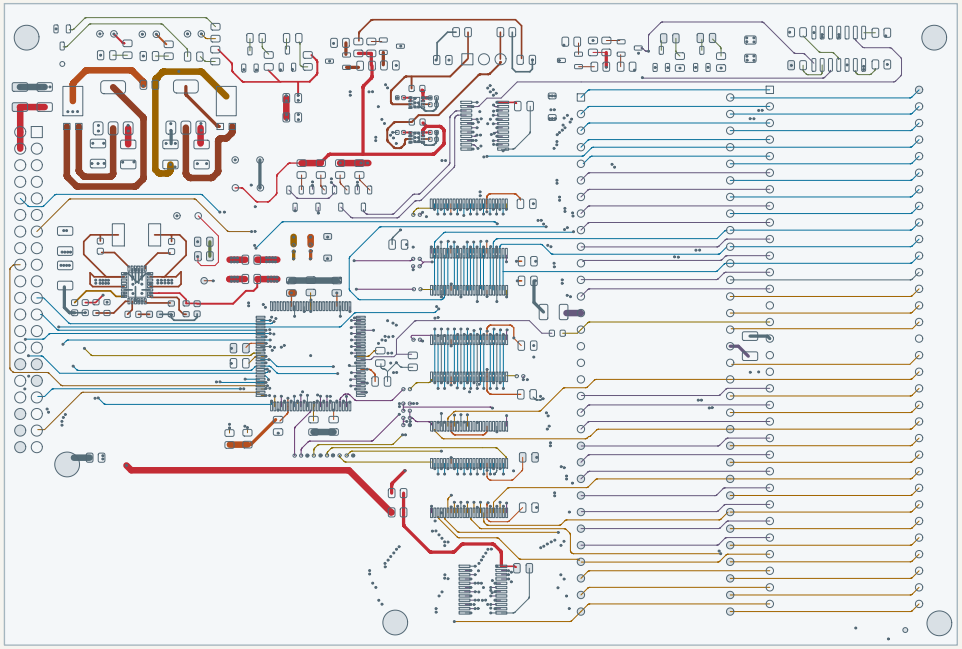

Back copper / through-board view

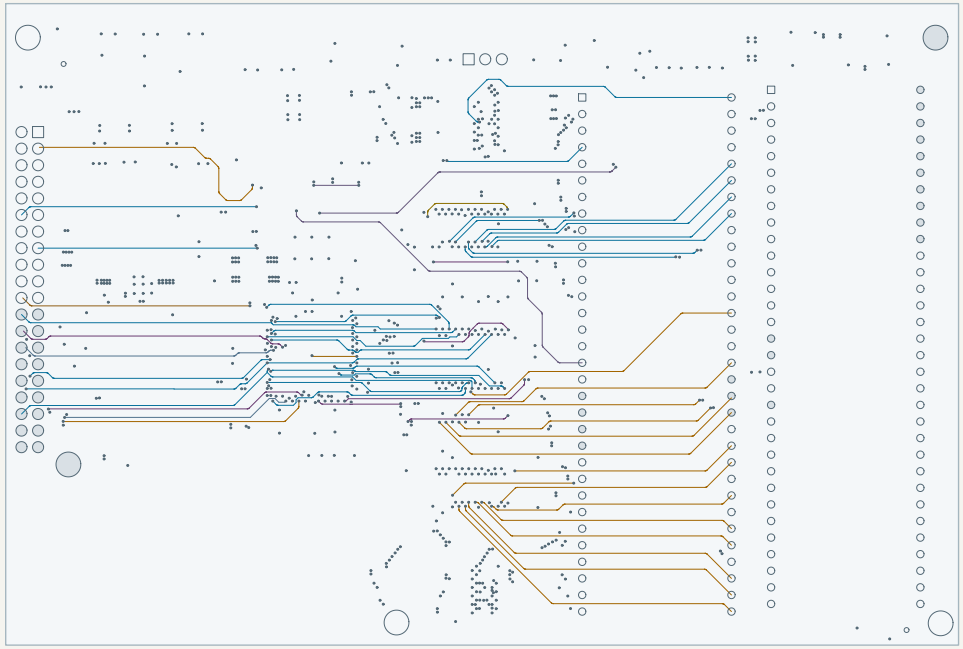

Colours identify net function. Grey pads and vias retain the saved geometry. Use native PCB layers for inner copper, zone fills and fabrication output.

Ranko Rodic / Minimig.ca | Precision-Arrays

1.8 • generated 2026-10-16 • source 82030dcfa626

Units: mm. Source CAD governs. Regenerate after design changes.

Documentation only; no electrical symbols

Minimig.ca / Minimig

Sheet: /Board guide and engineering reference/Routing guide/
File: Routing.kicad_sch

Title: AmiCube PiStorm68K / Routing guide

Size: A4	Date: 2026-10-16	**Rev: 1.8**
KiCad E.D.A. 10.0.7		Id: 15/16

Power and signal identification

Shared functional colour families for schematic labels and PCB copper.

GROUND	2		ADDRESS	26
POWER 5V	8		LATCH CONTROL	21
POWER 3V3	3		CPU CONTROL	46
POWER OTHER	3		JTAG	4
POWER CONTROL	32		INDICATORS	22
CLOCK	10		EXPANSION	2
DATA	32			

Follow each signal through the hierarchy by its global net label. Bus aliases summarize cross-sheet signal groups; the HTML guide lists every alias and colour assignment.

PCB Editor: Appearance → Objects → Net colours → All. Colour-only VIS_ classes preserve the original track, via and clearance rules.

Ranko Rodic / Minimig.ca | Precision-Arrays

1.8 • generated 2026-10-16 • source 82030dcfa626

Units: mm. Source CAD governs. Regenerate after design changes.

Documentation only; no electrical symbols

Minimig.ca / Minimig

Sheet: /Board guide and engineering reference/Power and signal identification/
File: PowerAndBuses.kicad_sch

Title: AmiCube PiStorm68K / Power and signal identification

Size: A4	Date: 2026-10-16	Rev: 1.8
KiCad E.D.A. 10.0.7		Id: 16/16